GAIN

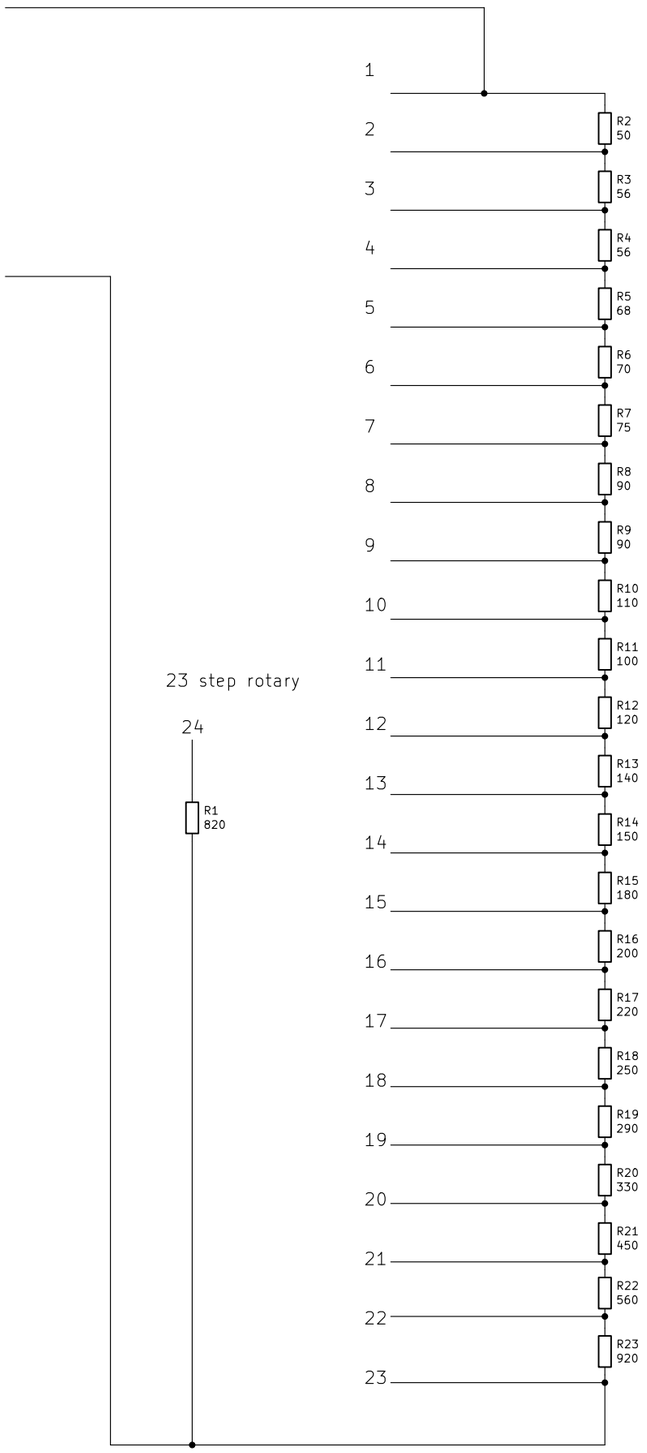

0.5 dB steps

SIDECHAIN BOARD THRESHOLD

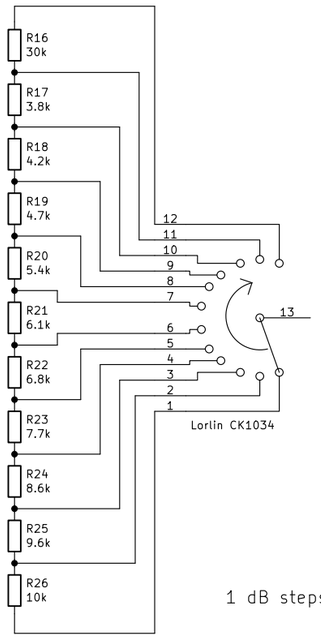

1 dB steps

HI–LO range for threshold

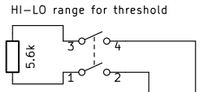

Use 5.6k resistor with Hammond 107V
Use 4.7k resistor with Hammond 107N

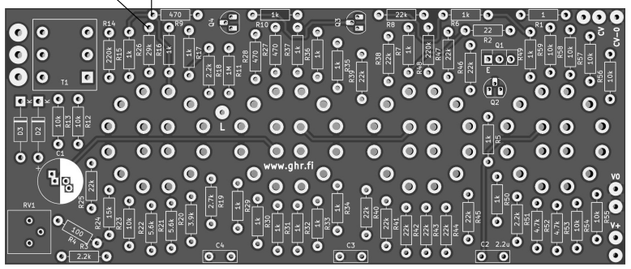

MAIN BOARD

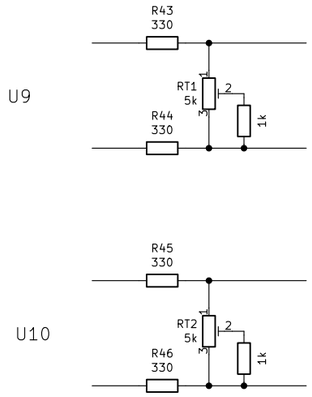

change R39, R40, R41, R42 to 1 ohm

change U9 & U10 to INA2137

RT1 & RT2 trimmers or multiturn pots

Adjust gain rotary switch to postion 12
and adjust RT for unity gain.

750

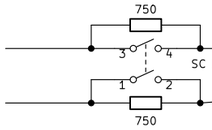

SC HPF

750

HI–LO range for threshold

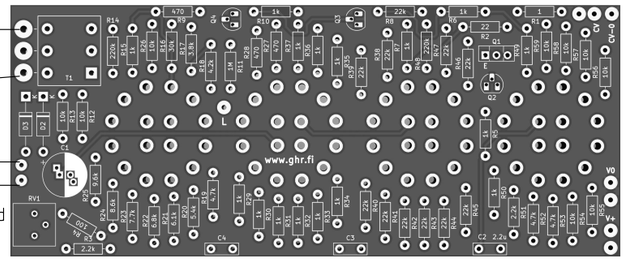

Latest revision of the sidechain board
has pads added for the Hi–Lo
threshold switch

www.ghr.fi
Sheet: /
File: stepped.kicad_sch

Title:

Size: A3	Date: 2021–12–09	Rev:
KiCad E.D.A. eeschema 6.0.0+dfsg1–2		Id: 1/1