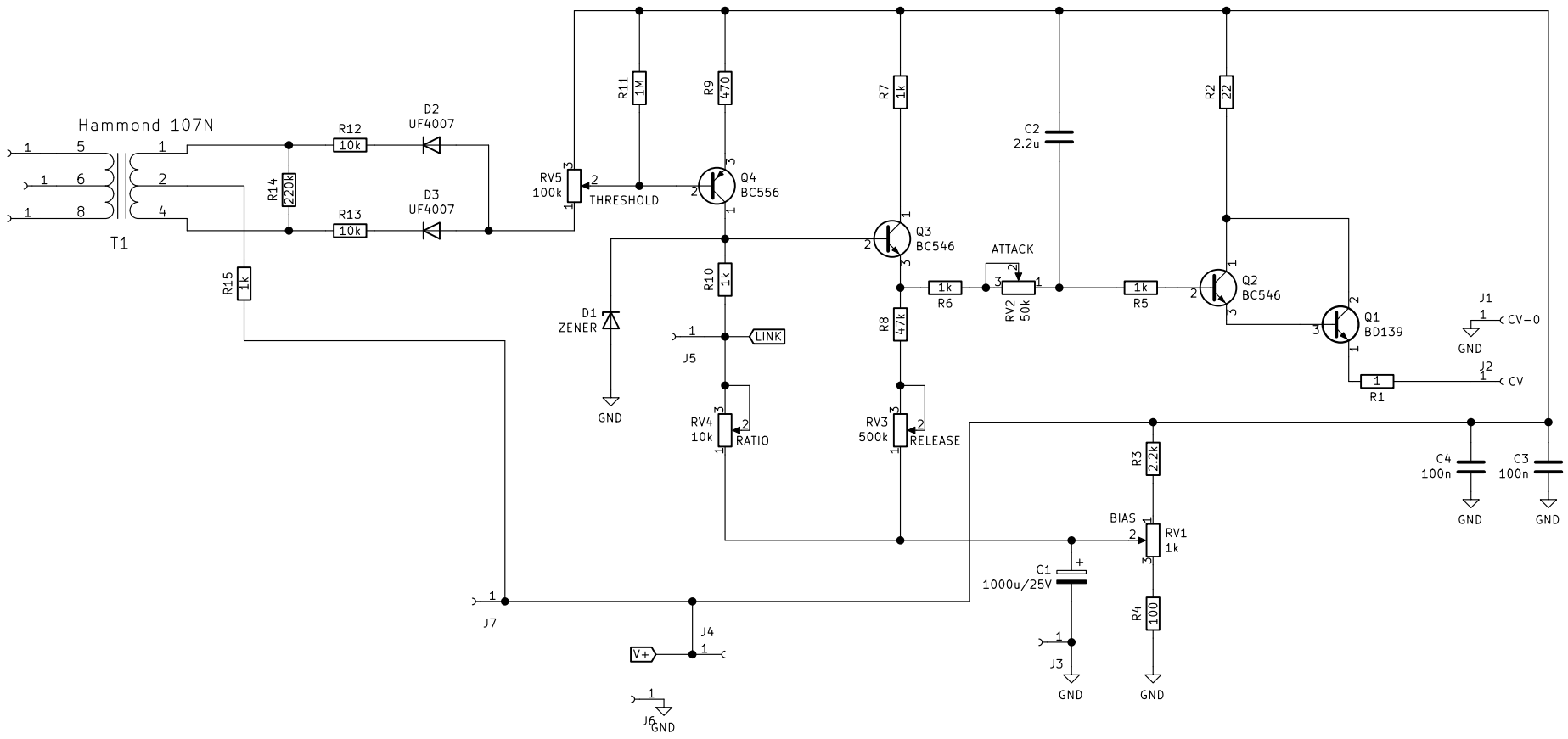
Hammond 107N
T1
R12
10k
R13
10k
D2
UF4007
D3
UF4007
R14
220k
R15
1k
RV5
100k
THRESHOLD
R11
1M
R9
470
Q4
BC556
R10
1k
D1
ZENER
GND
J5
LINK
RV4
10k
RATIO
R7
1k
Q3
BC546
R8
47k
RV3
500k
RELEASE
C2
2.2u
R6
1k
ATTACK
RV2
50k
R5
1k
R2
22
Q2
BC546
Q1
BD139
R1
1
J1
CV-0
GND
J2
CV
C4
100n
C3
100n
GND
GND
R3
2.2k
BIAS
RV1
1k
C1
1000u/25V
R4
100
J3
GND
GND
J7
J4
V+
J6
GND