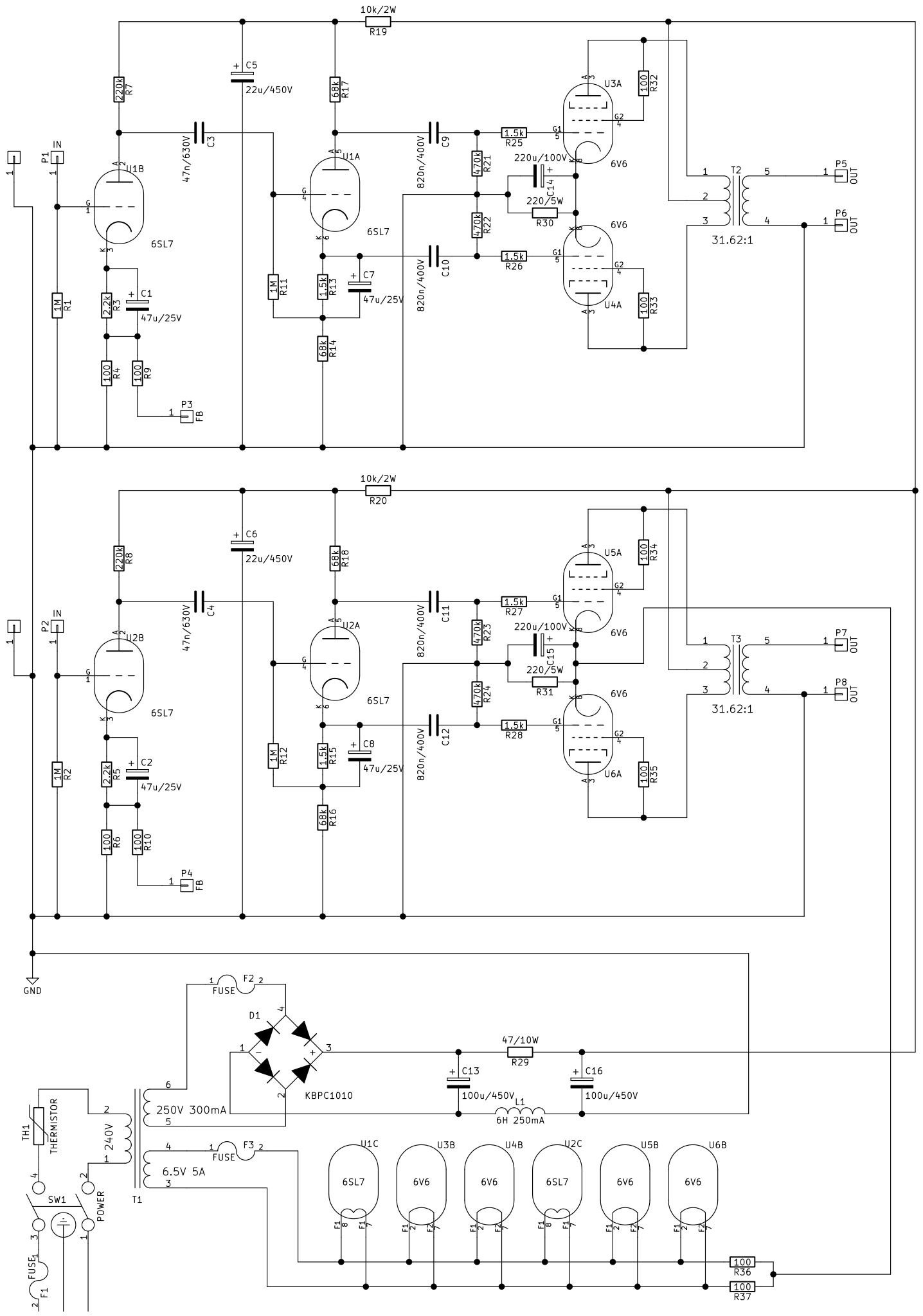

10k/2W
R19
C5
22u/450V
220k
R7
68k
R17
U3A
100
R32
IN
P1
U1B
47n/630V
C3
U1A
820n/400V
C9
1.5k
R25
470k
R21
220u/100V
C14
220/5W
R30
6V6
T2
P5
OUT
P6
OUT
6SL7
470k
R22
1.5k
R26
C10
820n/400V
U4A
100
R33
31.62:1
1M
R1
2.2k
R3
C1
47u/25V
1M
R11
1.5k
R13
C7
47u/25V
68k
R14
100
R4
100
R9
P3
FB
10k/2W
R20
C6
22u/450V
220k
R8
68k
R18
U5A
100
R34
IN
P2
U2B
47n/630V
C4
U2A
820n/400V
C11
1.5k
R27
470k
R23
220u/100V
C15
220/5W
R31
6V6
T3
P7
OUT
P8
OUT
6SL7
470k
R24
1.5k
R28
C12
820n/400V
U6A
100
R35
31.62:1
1M
R2
2.2k
R5
C2
47u/25V
1M
R12
1.5k
R15
C8
47u/25V
68k
R16
100
R6
100
R10
P4
FB
GND
F2
FUSE
D1
47/10W
R29
C13
100u/450V
C16
100u/450V
KBPC1010
L1
6H 250mA
250V 300mA
TH1
THERMISTOR
240V
F3
FUSE
6.5V 5A
T1
SW1
POWER
FUSE
F1
U1C
U3B
U4B
U2C
U5B
U6B
6SL7
6V6
6V6
6SL7
6V6
6V6
100
R36
100
R37